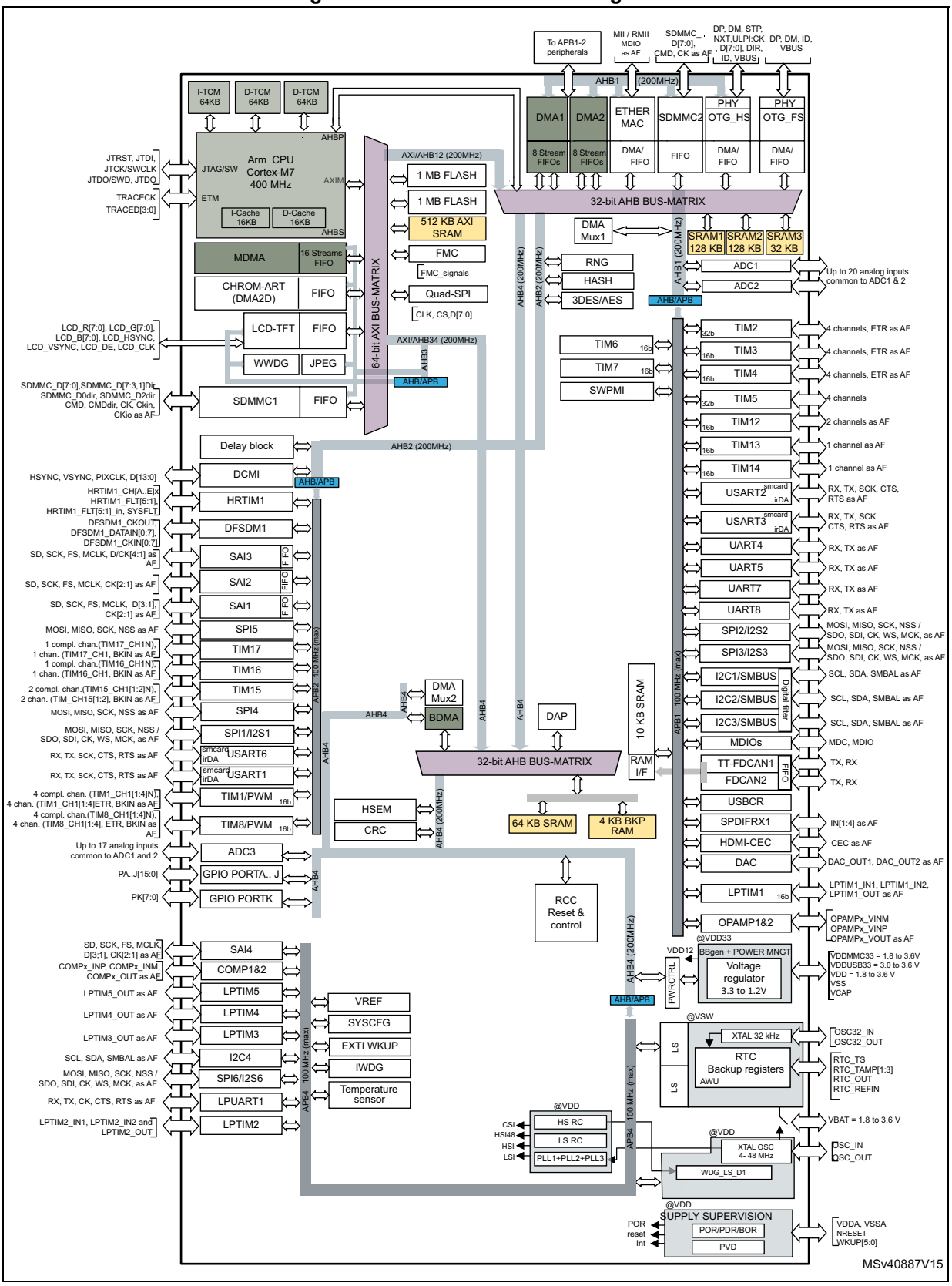Figure 1. STM32H753xI block diagram